Check for updates

ADVANCED FUNCTIONAL MATERIALS
www.afm-journal.de

Fast Cycling Speed with Multimillion Cycling Endurance of Ultra-Low Loss Phase Change Material (Sb_2Se_3) by Engineered Laser Pulse Irradiation

Md Shah Alam, Ryan Laing, Zhanibek Bolatbek, Remona Heenkenda, Rudra Gnawali, Tamara E. Payne, Andrew Sarangan, Joshua R. Hendrickson, and Imad Agha**

Programmable and reconfigurable photonics is revolutionized the next generation of Si/SiN-based photonics processors, optical signal processing, and neural and quantum networks. Ultra-low loss phase-change technology has the enormous potential to offer energy-efficient, extra large-scale integrated (ELSI) nonvolatile programmable photonics that can overcome the limitations of commonly used volatile and energy-hungry programmable photonic systems. So far, most of the phase change materials (PCM) devices have already shown to be suitable for programmable and reconfigurable photonic circuit applications that do not require extreme endurance or ultra-fast switching speeds. However, applications with ultra-fast speed and multi-million cycling requirements, such as memory cells, quantum computing, optical displays, and optical modulators necessitate enormous improvements in the existing cycling speed and endurance of PCMs, for high-performance device configuration. Here, optical switching of an ultra-low loss PCM (Sb_2Se_3) is demonstrated with an unprecedented combination of rapid cycling speed (0.6×10^5 cycles s^{-1}) and extreme endurance ($> 2 \times 10^6$ cycles) that pave the way for ultrafast, large-scale, programmable, and reconfigurable integrated photonic circuits and devices.

1. Introduction

Reconfigurable and tunable photonic elements offer versatile solutions for optical signal processing and programmable photonic processors.[1–3] Researchers are continuously striving to find on-chip tuning techniques, as well as trying to overcome the limitations of existing technologies, such as energy consumption, tuning speed, and switching endurances.[4,5] There are several on-chip tuning techniques available utilizing thermo-optical effect,[6,7] electro-refractive switching,[8] or embedded heaters on waveguides to modulate the refractive index.[9] These processes require continuous energy consumption that limits the potential real-world applications. On the other hand, Mach-Zehnder modulators and ring modulators based on voltage-controlled carrier concentration in the *p–n* junction across a Si waveguide can be used to create ultrafast optical switches and phase shifters,[5,10] but require either strong resonances or large propagation lengths. As a tuning technique, the most important characteristic of optical phase change materials (PCMs) is that they offer within a wavelength-scale footprint nonvolatile, energy-efficient, large optical modulation for dynamic and reconfigurable nanophotonics.[4]

M. S. Alam, Z. Bolatbek, R. Heenkenda, A. Sarangan, I. Agha
Department of Electro-Optics and Photonics
University of Dayton
Dayton, OH 45469, USA
E-mail: alam@ionq.com; iagha1@udayton.edu
M. S. Alam
IonQ
Inc.
4505 Campus Drive, College Park, MD 20740, USA

R. Laing
Department of Physics
University of Connecticut
Storrs, CT 06269, USA
R. Gnawali, J. R. Hendrickson
Air Force Research Laboratory
Sensors Directorate
Wright-Patterson Air Force Base 45433, OH, USA
T. E. Payne
Altamira Technologies Corporation
2850 Presidential Dr., Fairborn, OH 45324, USA
I. Agha
Department of Physics
University of Dayton
Dayton, OH 45469, USA

The ORCID identification number(s) for the author(s) of this article can be found under https://doi.org/10.1002/adfm.202310306

© 2023 The Authors. Advanced Functional Materials published by Wiley-VCH GmbH. This is an open access article under the terms of the Creative Commons Attribution License, which permits use, distribution and reproduction in any medium, provided the original work is properly cited.

DOI: 10.1002/adfm.202310306

Among PCMs, Germanium Antimony Telluride (GST) is very popular because of its extraordinary refractive index contrast[11,12] upon switching from its amorphous to crystalline states. The relatively low switching temperature and large refractive index contrast of GST between its crystalline and amorphous phases (n_a = 3.85 + i 0.05 and n_c = 6.60 + i 1.08, Δn = 2.75 + i 1.03 at a wavelength of 1550 nm[12]) have been exploited in various reconfigurable photonics applications such as active chiral metasurfaces,[13] dual-mode electro-optics devices,[14] on-chip photonic memories,[15] on-chip waveguide switches,[16] and photonic neural networks.[17] However, the narrow bandgap (0.4–0.7 eV)[18] and strong absorption of GST severely limit these devices in size and scalability, especially in the visible/NIR. GST is primarily used in amplitude modulators rather than switches or routers. Recent work has demonstrated GST in neural networks[17,19] by cascading these devices, however, the work required frequent amplification in a circuit to overcome the cumulative losses. Moreover, the high extinction coefficient and low real refractive index contrast of GST in the visible waveband (n_a = 3.82 + i 1.55 and n_c = 4.02 + i 3.80, Δn = 0.2 + i 2.27 at a wavelength of 633 nm[12]) further restricted its use to mostly within the infrared region. In the path of searching for higher bandgap, lower loss PCMs, researchers have investigated different alloys. For example, Se can be added to increase the bandgap of GST which has led to the development of Ge-Sb-Se-Te (GSST).[20] Similarly, Sb_2Te_3,[21] GeTe,[22] and $SnSe_2$[23] have been investigated as potential alternatives to GST, but the bandgap is still not large enough to be useful in the visible and infrared regions with low loss. Liu et al.[24] investigated >50 materials similar to GST for their potential photonics applications, but they still corresponded to a bandgap <1 eV. Very recently, Sb_2Se_3 and Sb_2S_3 have been investigated and found to be high-bandgap PCMs suitable for applications in the visible and infrared wavebands.[25] Sb_2Se_3 and Sb_2S_3 exhibit ultra-low absorption losses ($k = 10^{-5}$) above the near-infrared wavelength in both their amorphous and crystalline phases and operate at low crystallization switching temperatures of 270 °C for Sb_2S_3 and 200 °C for Sb_2Se_3[25] while remaining nonvolatile at room temperature. The crystalline and amorphous refractive index of Sb_2Se_3 is found to be $n_c = 4.050 + i$ 0, n_a = 3.285 + i 0 at 1550 nm and n_c = 4.939 + i 0.402, $n_a = 3.660 + i$ 0.028 at 800 nm[25]; and for Sb_2S_3, $n_c = 3.308 + i$ 0, $n_a = 2.712 + i$ 0 at 1550 nm and $n_c = 3.630 + i$ 0.008, $n_a = 2.943 + i$ 0 at 800 nm.[25] The ultralow loss nature of these materials compared to GST in the near infrared and telecom bands, as well as having a refractive index more closely matched to that of silicon, opens the path to more versatile and flexible applications in nanophotonics and integrated photonic circuits technology. [25–28] The proximity of refractive indices of Sb_2Se_3 and Sb_2S_3 with Si helps in superior mode matching to silicon-on-insulator (SOI) waveguides and, thereby, offers a more straightforward path to direct integration of large scale PCMs in Si integrated photonics circuits technology.

Despite the exciting progress in PCMs, several limitations and challenges still exist in PCM-based reconfigurable integrated photonic circuits, such as unreliable multilevel operation, low endurance, and comparatively lower cycling/tuning speed.[4] High-speed tunability is desired for modulating optical signals for fast operations such as in optical communications. Energy-efficient, high-speed modulation techniques can expedite large-scale optical computing and quantum information processing technology. Electro-optic[29,30] and free-carrier dispersion effects[31] are currently the leading mechanisms for high-speed tuning in PICs. On the other hand, PCMs are mostly used for applications with energy-efficient nonvolatile programmable photonics where the speed of tunability doesn't play an important role.[4] Although some narrow bandgap and lossy PCMs are found to be of high cycling endurance and comparatively high cycling speed,[32] the ultra-low loss PCMs like Sb_2Se_3 and Sb_2S_3 are still reported to be of comparatively lower cycling endurance and speed.

The electrical and optical switching speeds of PCMs are limited by the crystallization speed due to the stochastic crystal nucleation process. The typical crystallization speed of GST is reported to be approximately tens of nanoseconds in electronic phase-change random access memory (PCRAM), whereas that of photonic devices is longer than 100 ns.[27,33] Kim et al. recently reported a record-high cycling endurance at $\approx 10^{12}$ cycles of electrical switching of GST in a phase-change memory device with a metallic liner.[34,35] Rao et al. reported that rationally designed scandium-doped antimony telluride $Sc_{0.2}Sb_2Te_3$ (SST) reduces the stochasticity of nucleation with an improved crystallization speed of 700 ps[27,33] with cyclability of $\approx 10^5$. Reducing the voltage bias can increase the endurance up to $\approx 4 \times 10^7$ cycles while increasing the programming pulse widths to tens of ns.[27,33] The narrow bandgap and high loss of SST ($n_c = 6.65 + i$ 1.35, $n_a = 5.96 + i$ 0.95 at 1550 nm and $n_c = 5.30 + i$ 3.7, $n_a = 5.03 + i$ 3.15 at 800 nm) ,[27] however, restricts its use in the infrared waveband and to applications where optical absorption is not an issue (e.g, electronic memories). Therefore, for the flexibility and development of more versatile uses of PCMs in nanophotonics and integrated photonic circuits technology, it is critical to find a way to achieve high speed and high endurance for large bandgap, ultra-low loss PCMs. So far, the crystallization speed of the well-known ultra-low loss PCM, Sb_2Se_3, is reported to be merely 100 ms with an endurance of 5000 cycles. Similarly, Sb_2S_3 is reported to have a crystallization speed of 100 ms with an endurance of 1000 cycles.[25,36] Using femtosecond multi-pulse laser irradiation for amorphization of Sb_2S_3 and continuous wave (CW) laser irradiation crystallization, the endurance can be maximized at 7000 cycles[26] at the expense of sacrificing cycling speed. Despite the extraordinary potential of ultra-low loss PCMs, the slow switching speed and low endurance of Sb_2Se_3 and Sb_2S_3 restrict their uses in photonics applications that do not require more frequent switching and fast tuning.

In this article, we focus on increasing the cycling speed of Sb_2Se_3 with high endurance and repeatable and consistent multilevel switching, to facilitate the incorporation of ultra-low loss tunable material into high-speed, more reliable, long-lasting reconfigurable PICs, as well as high-speed optical memory cells and applications in optical computing and quantum information processing. We employ optical excitation as a first path toward material and structural optimization. By engineering the optical pulse tail, a single-step full crystallization speed of 7.25 µs and a multilevel partial crystallization speed of 2.4 µs are demonstrated in an indium tin oxide (ITO) capped 50 nm Sb_2Se_3 film which are several orders of magnitude faster than previous demonstrations. The switching approach demonstrates very little degradation until 2×10^6 cycles. Various reconfigurable prototype structures are implemented to show the

© 2023 The Authors. Advanced Functional Materials published by Wiley-VCH GmbH

16163028, 2024, 14, Downloaded from https://advanced.onlinelibrary.wiley.com/doi/10.1002/adfm.202310306 by Chetanat Padungathikij - Cochrane Thailand , Wiley Online Library on [18/03/2026]. See the Terms and Conditions (https://onlinelibrary.wiley.com/terms-and-conditions) on Wiley Online Library for rules of use; OA articles are governed by the applicable Creative Commons License

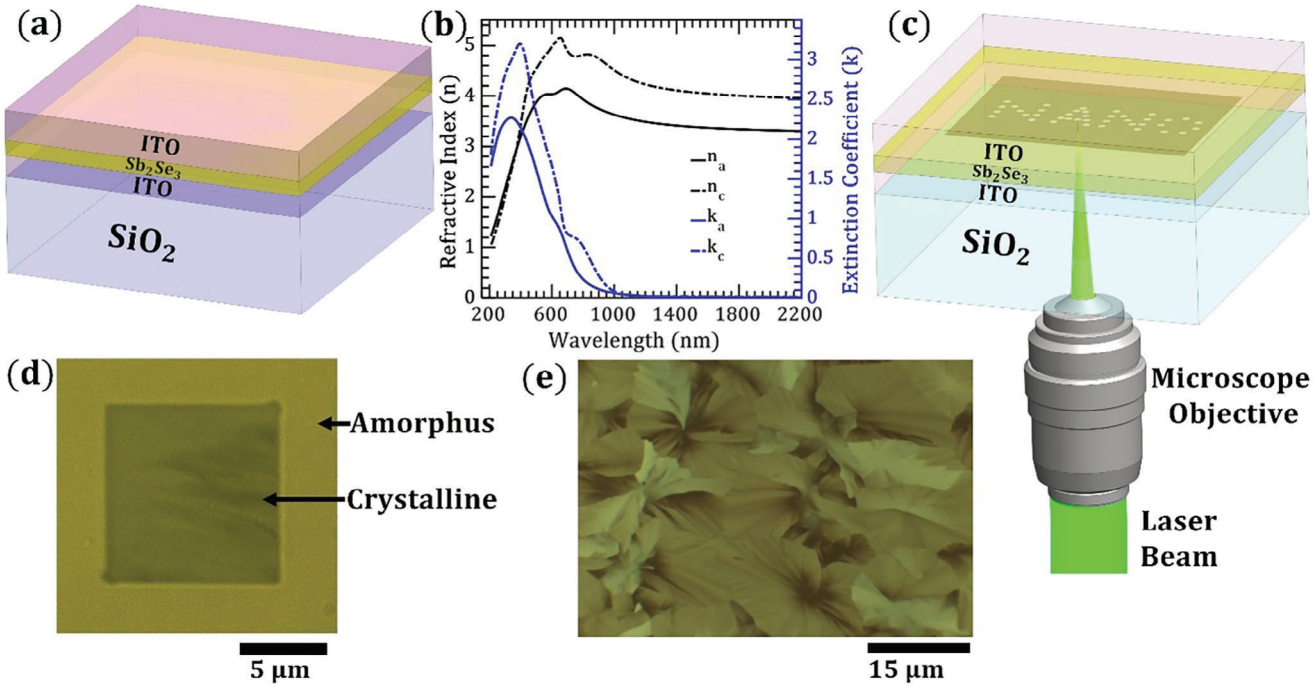

Figure 1. a) Schematic of the fabricated Sb2Se3 film sample. b) Complex refractive index of Sb2Se3 in amorphous andcrystalline states. c) Schematic of the optical switching of Sb2Se3 film with focused laser beam. d) Transmission modeoptical image of optically crystallized Sb2Se3 film. e) Transmission mode optical image of thermally crystallized Sb2Se3.

viability of the technology as a vehicle for high-speed reconfigurable metasurfaces.

2. Results

2.1. Reversible Switching of Sb_2Se_3

A 50 nm Sb_2Se_3 PCM thin film is fabricated on commercially available 70 nm ITO-coated ≈0.17 mm glass coverslips from SPI Supplies as described in the Experimental Section. A 100 nm ITO layer is deposited on top of the Sb_2Se_3 film as a capping layer. **Figure 1a** shows the schematic of the fabricated sample. ITO is chosen as it is optically transparent with very low loss and moderate thermal conductivity (see Note S1, Supporting Information) which helps in increasing switching speed with high endurance. Throughout this article, the same fabrication parameters have been used (50 nm Sb_2Se_3 film on a commercially available 70 nm ITO coated ≈0.17 mm glass coverslip and 100 nm ITO capping layer). Figure 1b represents the ellipsometry of the fabricated Sb_2Se_3 film in amorphous and crystalline states. In this article, a 532 nm (green) focused laser beam of ≈350 nm focal spot has been used for optically switching the Sb_2Se_3 film from both amorphous to crystalline and crystalline to amorphous states as shown in Figure 1c. Both the real and imaginary parts of the refractive index of Sb_2Se_3 in the crystalline state are higher than that of the amorphous state, therefore, both the reflection and absorption of visible light are higher for the crystalline state as compared to the amorphous state. That is why the crystalline region of the transmission mode optical image of the optically switched Sb_2Se_3 film looks darker compared to the amorphous state as shown in Figure 1d. The dark region of the central square represents a 10 × 10 μm optically crystallized region while the surrounding, brighter region represents the as-deposited amorphous region (Figure 1d). Figure 1e shows the transmission mode bright field image of thermally crystallized Sb_2Se_3 film. The 50 nm as-deposited amorphous Sb_2Se_3 is thermally annealed on a hot plate at 200 °C for 10 min to thermally crystallize the film. Many crystal grains in a variety of directions are observed for the thermally annealed crystallized sample due to the nucleation-dominated crystal growth[25] (Figure 1e). The focused laser beam optically switched crystallized samples (Figure 1d) represents more uniformity when compared to the thermally annealed crystallized samples (Figure 1d,e).

The temperature of the Sb_2Se_3 film rises due to the laser absorption when exposed to the 532 nm focused laser beam owing to the complex refractive index of Sb_2Se_3 at 532 nm ($n_a = 3.99 + i$ 1.40, $n_c = 4.69 + i$ 2.12), resulting in optical switching. A 100X, NA 1.30 oil immersion microscope objective is used to focus the laser beam to a FWHM spot size of around 235 nm. Initially, a CW focused laser beam of 216 µW (corresponding to 2.24 mw μm^{-2} average laser intensity at the focal spot) is used to crystallize the (ITO-capped) 50 nm Sb_2Se_3 film. The Sb_2Se_3 film sample is held with an XYZ piezo stage along with a micro-translational stage. The Z axis is considered as the k-vector axis. The Sb_2Se_3 film sample is moved to the focal plane using the micro-translational stage and XYZ piezo stage, and then the film surface is exposed to the focused laser beam. Finally, the sample is moved in the XY plane while maintaining the Sb_2Se_3 film surface on the focal plane, using the XYZ piezo stage for spatial translation while optically switching (crystallizing) the film

© 2023 The Authors. Advanced Functional Materials published by Wiley-VCH GmbH

16163028, 2024, 14, Downloaded from https://advanced.onlinelibrary.wiley.com/doi/10.1002/adfm.202310306 by Chettanat Padungathi[kl] - Cochrane Thailand , Wiley Online Library on [18/03/2026]. See the Terms and Conditions (https://onlinelibrary.wiley.com/terms-and-conditions) on Wiley Online Library for rules of use; OA articles are governed by the applicable Creative Commons License

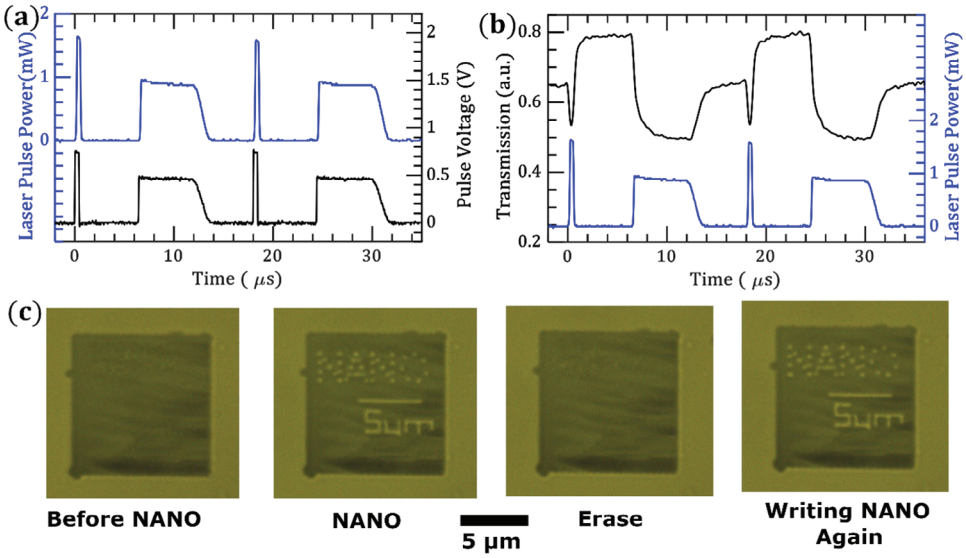

Figure 2. a) Applied electric pulse to the acousto optic modulator (AOM) and corresponding generated optical pulse used for fast reversible optical switching. (b9c) Written pattern "NANO" using fast optical pulse. The Vedio S2 (Supporting Information) displays the corresponding video of reversible optical switching and erasable pattern writing on Sb2Se3 using ultrafast switching parameter.

using the cw focused laser beam. The details of the experimental setup and working principle are explained in the "Experimental Section". The Video S1 (Supporting Information) represents the scanning of 10 μm × 10 μm area of the Sb_2Se_3 film under 2.24 mw μm^{-2} CW laser intensity and resulted crystallization region.

After the initial crystallization of the as-deposited Sb_2Se_3 film, the sample can be reversibly optically switched to amorphous and back to crystalline states by applying optical pulses at a very high speed. Optical pulses are generated from the CW laser by using an acousto-optical modulator (AOM). A programmable electrical pulse train is applied to the AOM controller to generate laser pulses of desired optical pulse power, width, and temporal shape. The amorphization requires the Sb_2Se_3 material to be melted (610 °C) and quickly cooled below the crystallization temperature (200 °C). Crystallization requires raising the temperature of the sample above the crystallization temperature and cooling it down below the crystallization temperature at a comparatively slower rate. As a result of these different rates, a comparatively higher-power, shorter-duration laser pulse is required for melting and fast quenching of Sb_2Se_3 for amorphization, while lower power and comparatively wider pulse width is required for crystallization. Therefore, the time required for complete phase change switching cycle (crystalline-amorphous-crystalline) is dominated by the time required for crystallization. The time required for crystallization over a nanoscale distance, d, can be represented by d/v_{cryst}, where v_{cryst} is the crystallization velocity. Higher crystallization velocity results in a faster switching speed of a certain thickness of the PCM. The velocity typically exhibits an Arrhenius temperature dependence.[37–40] v_{cryst} is higher in a higher temperature regime, therefore, the excitation of the PCM film at a higher temperature helps in faster crystallization. For improved speed, the sample should be excited with an amount of laser power that pushes the PCM film temperature to a higher level without exceeding the melting point. On the other hand, for successive reversible switching, it is very important to let the sample cool down and dissipate the heat quickly enough in the surrounding area before starting the next switching cycle, otherwise, successive accumulation of heat in the PCM film may not allow the film to be cooled down below the crystallization temperature after several successive switching cycles, causing the film to remain in the amorphous state. Engineered optical pulse excitation is therefore critical to achieving successive high-speed reversible optical switching. Instead of using a sharp rectangular optical pulse, longer fall time optical pulses, or nearly inverse sawtooth optical pulses, are used to excite the PCM film for crystallization, as shown in **Figure 2a**. The intensity and shape of the optical pulses directly follow the amplitude and shape of the electrical pulses applied to the AOM controller. Figure 2a represents the instantaneous amplitude of applied electric pulses and corresponding output optical pulses from AOM while 3.5 mW, 532 nm CW laser power is sent to the AOM. For fast crystallization, laser pulse power, duration, and fall time are optimized such that the temperature of the PCM film is well above the crystallization temperature (> 200 °C) but slightly below the melting temperature (< 610 °C). If too short of a pulse is applied for crystallization, then the film cools down faster than the crystallization speed, resulting in no crystallization or partial crystallization. Therefore, for fast crystallization, the pulse tail is elongated along with a shorter pulse duration that i) prevents the PCM film from cooling down faster than the crystallization speed, resulting in more crystallization in a shorter time, and ii) minimizes heat accumulation in the film in successive high-speed reversible switching. The absorption of the film continuously increases in the crystallization process due to the increase of the extinction coefficient with the growth of crystallization. Additionally, the gradual lower power exposure, due to the longer fall time, helps in maintaining the temperature at a level suitable for a gradual crystallization process. The thermal conductivities of the PCM film as well as the surrounding medium are very important in the switching speed

© 2023 The Authors. Advanced Functional Materials published by Wiley-VCH GmbH

16163028, 2024, 14, Downloaded from https://advanced.onlinelibrary.wiley.com/doi/10.1002/adfm.202310306 by Chettanat Padungathaki - Cochrane Thailand , Wiley Online Library on [18/03/2026]. See the Terms and Conditions (https://onlinelibrary.wiley.com/terms-and-conditions) on Wiley Online Library for rules of use; OA articles are governed by the applicable Creative Commons License

and endurance cycles (see Note S1 and Figure S1a, Supporting Information). Very high thermal conductivity of the surrounding medium may cause faster cooling compared to the crystallization speed which adversely affects the crystallization process and very low thermal conductivity may cause very slow cooling resulting in slower crystallization speed, in addition to lower probability of amorphization due to failure of melt-quenching (see Note S1 and Figure S1b, Supporting Information). Here, a moderately thermally conductive material (ITO)[42,42] has been used as a surrounding medium which provides a balanced cooling of the PCM film, helping in faster crystallization.

To find the optimal parameters for fast switching experimentally, we performed an exhaustive parametric study in which the pulse width, pulse fall time, and input power were varied systematically until the shortest pulse + fall time was achieved while maintaining complete crystallization/amorphization cycles (see Note S2, Supporting Information). For the fastest switching of the Sb_2Se_3 film, a 0.75 V, 500 ns rectangular pulse of very short fall time for the amorphization and a 0.48 V, 7.25 µs rectangular pulse of large fall time (1.92 µs) for the crystallization are applied to the AOM which result in a very similar pattern laser pulse out of the CW laser (Figure 2a). The corresponding laser pulses are 600 ns, 1.89 mW for amorphization and 7.25 µs, 1.09 mW with 1.92 µs fall time for crystallization, respectively (Figure 2a), which represents the fastest switching speed achieved in an optically thick wide bandgap PCM beyond the heterogeneous nucleation limit.[43] The corresponding average peak intensity at the Sb_2Se_3 film of the applied focused laser pulse for amorphization and crystallization are 19.54 mw μm^{-2} and 11.23 mw μm^{-2}, respectively. The gap between the pulses for amorphization to crystallization and crystallization to amorphization are 5.75 µs and 4.4 µs, respectively, leading to a cycle (amorphous-crystalline) time of 12 µs, and under 19 µs for the full (amorphous-crystalline-amorphous) cycle, and operation speed exceeding 0.6×10^6 cycles s^{-1}. A very low power 780 nm laser is co-aligned with the 532 nm laser pulse and focused on the Sb_2Se_3 film at the same spot to probe the sample transmission in real time while switching the sample. The FWHM of the 780 nm focal spot is around 350 nm which is slightly smaller than the 532 nm switched spot when including thermal diffusion effects. A Si avalanche photodetector is used to measure the real-time transmission of the 780 nm laser light through the sample. Figure 2b represents the engineered laser pulses and corresponding demonstration of fast reversible optical switching of the Sb_2Se_3 film from crystalline to amorphous and amorphous to crystalline states. The black line graph of Figure 2b represents the real-time transmission through the Sb_2Se_3 film while exciting the sample with 532 nm pulse laser beams. According to Figure 2b, the transmission through the sample is 0.65 (au) at the crystalline state. After applying the 600 ns amorphization laser pulse, the transmission increases by 21.5% and reaches to 0.79 due to the lower complex refractive index of the amorphous state compared to the crystalline state of the Sb_2Se_3 film at 780 nm. Again, after applying the crystallization pulse, the transmission goes down to 0.65 which demonstrates single-step, reversible switching from crystalline to amorphous and amorphous to crystalline states. It is to be noted that the area of amorphous region created by focused 532 nm laser beam (FWHM: 235 nm) is comparatively smaller than the probing area of 780 nm focused laser beam (FWHM: 350) on the Sb_2Se_3 film. Therefore, actual transmission through the amorphous region is comparatively higher than that is observed from the 780 nm transmission data. From Figure 2b it is observed that initially, the transmission through the film starts decreasing with the application of both the amorphization and the crystallization pulses due to the temperature dependency of the refractive index of the film. The transmission starts increasing with decreased instantaneous pulse power (at the pulse tail) and stabilizes to the steady (amorphous/crystalline) state after the pulse is turned off. An optical pattern "NANO" is written with a focused laser beam of 235 nm spot (FWHM) using the above described single amorphization optical pulses on a 10 μm × 10 μm optically crystallized region of the Sb_2Se_3 film surrounded by as-deposited amorphous region and then the pattern is erased using the above-described single crystallization optical pulses (Figure 2c). Thereafter, again "NANO" pattern is rewritten on the same spots using the above amorphization pulses parameter. The visual transparency of the sample at the switching spots compared to the as-deposited amorphous region of Figure 2c clearly demonstrates that the Sb_2Se_3 film can be fully amorphized and crystallized using the proposed pulse dynamic. As further evidence of nearly full switching of the thin film, the finite element modeling in Supporting Information S2 (Figure S1a, Supporting Information) indicates that the pulses employed are indeed sufficient to achieve the temperatures for full and uniform crystallization of the sample, while the spectral transmission data (Figure S2b, Supporting Information) of the film in both states, and the transfer-matrix calculation of the probe beam transmission (Figure S2c, Supporting Information) shows that the transmission drop upon complete crystallization indeed corresponds to our measured values nearly perfectly (with a possibility incomplete crystallization on the order of few nm at most).

The Video S2 (Supporting Information) shows the corresponding video of erasable and rewritable patterns on Sb_2Se_3 film using the above pulse parameters. A green light notch filter has been used in front of the camera to hide the focused laser beam and visualize the real-time transparency change while switching the sample.

2.2. Multi-Level Optical Switching

Multi-level optical switching is very promising and has the potential to revolutionize integrated photonic circuits technology. It can be used to introduce quasi-continuous rapid tuning of photonic circuits. As PCMs provide high refractive index contrast between the two states, multilevel switching provides a non-volatile tuning of PICs which is in contrast to that through electro-optic[29,30] and free-carrier dispersion effects.[31]

Figure 3 shows the multilevel optical switching at high speeds. In the case of multilevel optical switching, single-step rectangular amorphization optical pulses and multiple shorter nearly inverse saw-tooth crystallization optical pulses are used. In fact, the amorphization pulse parameters are kept the same as single step reversible switching (0.75 V, 500 ns), and six consecutive 0.48 V, 2.4 µs nearly inverse sawtooth electric pulses with 4.6 µs gaps between them are applied to the controller of AOM for six step multilevel crystallization. The gap between the

© 2023 The Authors. Advanced Functional Materials published by Wiley-VCH GmbH

16163028, 2024, 14, Downloaded from https://advanced.onlinelibrary.wiley.com/doi/10.1002/adfm.202310306 by Chetanat Padungathikij - Cochrane Thailand , Wiley Online Library on [18/03/2026]. See the Terms and Conditions (https://onlinelibrary.wiley.com/terms-and-conditions) on Wiley Online Library for rules of use; OA articles are governed by the applicable Creative Commons License

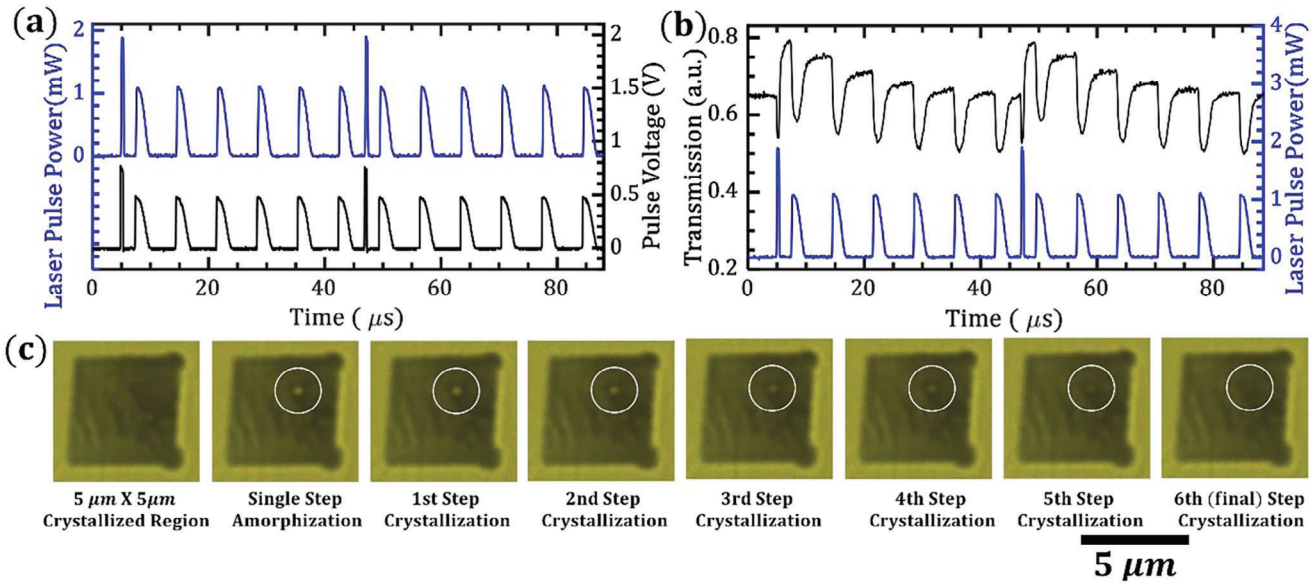

Figure 3. Multilevel reversible optical switching of Sb2Se3. a) Applied electric pulse to RF controller of AOM and corresponding optical pulse generated by the AOM. b) The corresponding change of optical transmission through the film due to multilevel switching in between amorphous and crystalline states while applying optical pulse train. c) Optical image of Sb_2Se_3 film for single step amorphization and multilevel crystallization.

amorphization and crystallization pulse is 2 µs. The generated optical pulses, as shown in Figure 3a, correspond to 600 ns pulse of 1.89 mW peak power for amorphization and 2.4 μs nearly inverse sawtooth pulse of 1.09 mW peak power for multi-level crystallization. Figure 3b represents the generated optical pulses and corresponding real time optical transmission of a very low-power, 780 nm, co-aligned, focused probe beam through the sample while optically switching the sample from crystalline to amorphous and amorphous to crystalline. The transmission through the fully crystallized film is 0.65 (a.u.) and the application of the amorphization pulse increases the transmission to 0.79 (a.u.) (21.5% increase). After the amorphization pulse, six consecutive crystallization pulses cause the six steps crystallization which can be observed by six steps transmission changes to 0.76, 0.72, 0.69, 0.67 0.66, and 0.65 (a.u.), respectively. The most important feature is that the transmission for all six steps is consistent for every cycle throughout the experiment. Figure 3c represents the visual transparency demonstration of the single-step amorphization and the six steps multilevel crystallization using the above multilevel optical switching parameters. In Figure 3c, a single amorphization optical pulse (600 ns pulse of 1.89 mW peak power and 235 nm FWHM focal spot) is applied at the center of the white circle of the 5 μm $\times$ 5 μm optically crystallized region surrounded by the as-deposited amorphous region. Next, six consecutive crystallization pulses (2.4 μs nearly inverse sawtooth pulse of 1.09 mW peak power) are applied at the center of the circle with 2 s intervals. The visual transparency differences at the center of the white circle after every crystallization optical pulse clearly demonstrate the six stable crystallization states due to six crystallization optical pulses. The Video S3 (Supporting Information) shows the video of single-step amorphization and six steps of crystallization. Each crystallization step is separated by 2 s for better visualization. The distinguishable brightness differences at the focal spot demonstrate the stable multistep complex refractive index difference, i.e., multi-step crystallization switching.

2.3. Endurance of Optical Switching

The achievement of high cycling endurance is the final hurdle to overcome to enable PCM technology to enter the large market of persistent memory products and non-volatile, high-speed tunable PICs. The study of the endurance failure mechanism-based principle of material science can lead to the successful development of high-endurance, reversible PCM switching. The endurance failure of PCMs is mainly caused by the atomic migration and compositional changes due to various driving forces such as crystallization-induced segregation, hole-wind force, and electrostatic force.[33] The temperature gradient causes atomic migration and void formation in PCMs while switching from one state to another. "Incongruent melting" or "crystallization-induced segregation" are considered to be responsible for these atomic migrations.[44,25,45] It has been observed that longer optical pulses with higher peak power for amorphization can lead to lower endurance due to the acceleration of atomic migration[34,46] or damaging the protective coating layer caused by the high thermal expansion. It is very important to optimize the laser peak power and the pulse duration so that the temperature of the Sb_2Se_3 film does not go too much above the melting point. The thermal conductivity of the surrounding medium plays a very important role in the endurance of PCM's reversible switching. For fast continuous switching, a too-low thermal conductivity in the surrounding film may cause heat accumulation in the Sb_2Se_3 film and surrounding region for successive switching cycles thereby causing endurance failure. Similarly, a too-high thermal conductivity of the surrounding region also adversely affects the endurance as it requires comparatively higher laser

© 2023 The Authors. Advanced Functional Materials published by Wiley-VCH GmbH

16163028, 2024, 14, Downloaded from https://advanced.onlinelibrary.wiley.com/doi/10.1002/adfm.202310306 by Chetanat Padungathitaj - Cochrane Thailand , Wiley Online Library on [18/03/2026]. See the Terms and Conditions (https://onlinelibrary.wiley.com/terms-and-conditions) on Wiley Online Library for rules of use; OA articles are governed by the applicable Creative Commons License

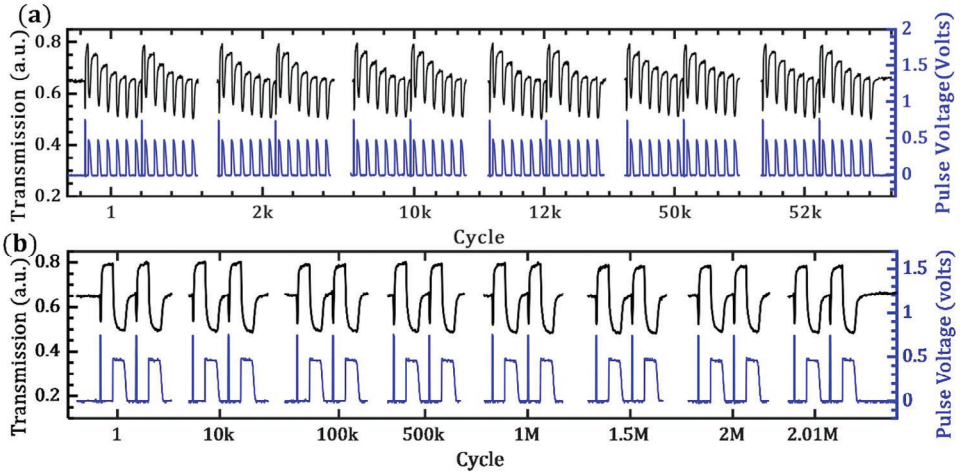

Figure 4. Demonstration of multimillion switching endurance. a) Demonstration of six step multilevel optical switching up to 52 K cycles without significant degradation; transmission contrast between amorphous and multilevel crystalline state at different cycles (up to 52 K) and corresponding applied pulse voltage to the AOM. b) Demonstration of single step optical switching up to 2.01 M cycles without significant degradation; transmission contrast between amorphous and crystalline state at different cycles (up to 2.01 M) and corresponding applied pulse voltage to the AOM.

peak power due to comparatively faster cooling which results in a higher temperature gradient inside the film. As the thermal conductivity of Sb_2Se_3 film is low, the region of the Sb_2Se_3 film in proximity to the high thermally conductive surrounding medium encounters lower temperature while the temperature of the other part of the film that is far away from the surrounding medium may rise to a very high level. Therefore, both a too high or too low thermal conductivity may adversely affect the endurance as well as the switching speed. The thickness of the Sb_2Se_3 film is also very important: the temperature difference increases along the cross-section of the Sb_2Se_3 film with increasing film thickness which adversely affects the endurance and speed of optical switching. Here, a 600 ns, 1.89 mW and 7.25 μs (with longer tail), 1.09 mW peak power focused laser pulses are found to be an optimal parameters for single step amorphization and crystallization respectively for 50 nm Sb_2Se_3 film on a commercially available 70 nm ITO coated ≈0.17 mm glass coverslip with 100 nm ITO coating on top of the film sample. As well as, 600 ns, 1.89 mW and 2.4 μs (with longer tail: nearly inverse sawtooth), 1.09 mW peak power laser pulses are found to be suitable pulse parameters for amorphization and multisteps (six steps) crystallization respectively. The sample is reversibly switched up to 50 K cycles with multi-step switching which shows the consistency in every cycle as shown in **Figure** 4a. Figure 4a shows the electric pulses to the AOM and corresponding real-time transparency of the Sb_2Se_3 film at the focal spot at different numbers of cycles up to 52 K cycles. The transmission levels at different crystallization steps remain almost the same through the 52 K cycles which demonstrates the high endurance of the sample with a very high switching speed. For single-step crystallization, a 7.25 µs, 1.09 mW peak power of 1.92 µs fall time laser pulse is applied that resulted in high-speed switching with very high endurance. The sample is reversibly switched up to 2×10^6 switching cycles with consistent transmission contrast between amorphous and crystalline states as shown in Figure 4b. Throughout the 2×10^6 cycles the transmission contrast stays similar ≈21%, which is fully consistent with spectral measurement and the optical model (see Note S2 and Figure S2b,c, Supporting Information) indicating that there is no material degradation or loss of the phase-change property of the film. These results show that the proposed parameters with engineered optical pulses provide fast switching speed with multimillion cycling endurance. We note that the focused laser beam profile is Gaussian shaped which causes a thermal gradient and results in comparatively higher temperature at the center of the focal spot. Both the speed and the endurance can potentially be further improved by applying a flat-top focused beam as it significantly decreases the temperature gradient in the exposed area of the PCM.

2.4. Fast Laser Writing of Optical Elements

Optical components like lenses, spectral filters, and polarization controllers with adjustable parameters offer numerous capabilities for potential applications. The tunability of such components is usually achieved by the actuation of constituent parts using methods such as stretching or heating. However, optical stimulation-based, reconfigurable components using PCMs provide more flexibility due to their rewritable and erasable characteristics on any position of the planar film, and multilevel refractive index control through manipulation of the optical excitation parameters.[47,48] Due to the low-loss, multilevel operation, high endurance and extra fast cycling speed of Sb_2Se_3, it offers such reconfigurable optical components with extraordinary performance (high fidelity) in the visible and near-infrared wavebands. Here, we demonstrate the fabrication of rewritable arbitrary structures with 300 nm resolution by direct laser writing. This technique allows programmable, nonvolatile, two-dimensional control of optical properties of the film with diffraction-limited resolution. Various photonic functions can be implemented using this technique, which is difficult via other technologies. The programmable, randomly reconfigurable surfaces are written, erased, and rewritten as a two-dimensional binary pattern into a 50 nm Sb_2Se_3 film by inducing a refractive-index-changing phase

© 2023 The Authors. Advanced Functional Materials published by Wiley-VCH GmbH

16163028, 2024, 14, Downloaded from https://advanced.onlinelibrary.wiley.com/doi/10.1002/adfm.202310306 by Chetanat Padungathikij - Cochrane Thailand , Wiley Online Library on [18/03/2026]. See the Terms and Conditions (https://onlinelibrary.wiley.com/terms-and-conditions) on Wiley Online Library for rules of use; OA articles are governed by the applicable Creative Commons License

Figure 5. Demonstration of fast laser writing for rewritable and tunable photonic device application.

transition with optimized and tailored trains of pulses as discussed in previous sections. To fabricate the desired structures, the Sb_2Se_3 film sample is moved around the focal spot on the focal plane by a piezo stage that is controlled by a computer program while the appropriate optical pulse are sent by controlling the AOM. The optimized amorphization pulses are applied for writing amorphized lines on optically crystallized Sb_2Se_3 film. The sample can be erased and rewritten for reconfiguration or modification of optical functionality as demonstrated by Video S2 (Supporting Information). **Figure 5** shows different arbitrary structures that can be used for focusing light, controlling polarization, and spectral filtering with the flexibility of reconfiguration on-demand. ≈350 nm-resolution amorphous dot/line structures can be developed with any arbitrary gap, which provides very affordable, high-resolution, 2D complex structures to produce different optical components with reconfigurable functionalities, limited by the thickness (<100 nm) that can be switched repeatedly. Moreover, the multilevel refractive index tuning (as described in Section 2.3) of the Sb_2Se_3 provides an extra degree of freedom over the 2D structures which can have many useful applications including holographic imaging and other grayscale applications. We note here that functional testing of these structures will be reserved for follow-up work where full testing of arbitrary as well as the limitations imposed by the thickness/resolution will be studied further.

3. Conclusion

In conclusion, this work demonstrated high-speed switching with unprecedented high endurance of the high band gap, ultra-low loss PCM, Sb_2Se_3. Engineered pulses with longer fall times have been proposed and demonstrated for high-speed crystallization that eventually increased the reversible switching speed with high endurance. The importance of the surrounding material with optimum thermal conductivity and thickness is discussed. We have also illustrated multilevel crystallization that offers non-volatile fine-tuning of photonics and integrated photonic devices using PCMs. The experimental results imply that by further investigation of the parameters of the surrounding material and with the application of optimized switching power and pulse dynamics, both the switching speed and the endurance of Sb_2Se_3 can be further improved. These improvements will pave the way for high-speed and high-endurance tunable photonics devices, phase change memories, and photonic integrated circuits. The deployment of optimized switching parameters demonstrated nanoscale fast laser writing that offers a path toward affordable, programmable photonic surfaces. Since our focus is on developing a low-loss system with unprecedented performance, we relied on optical switching as the quickest path to material optimization, with electronic switching left to follow-up work. However, the technique presented here can still be highly useful for a host of applications, such as reconfigurable diffraction gratings for spectroscopy, non-volatile spatial light modulators, adaptive optics for aberration correction, tunable elements for dispersion correction, and reconfigurable and programmable light concentrators, among others.

We note that in the future, the major challenge to overcome will be the upper limit on the thickness of film that can be efficiently cycled due to heat trapping in the center of the film. Even if the laser absorption depth is overcome using a higher wavelength laser (e.g., 780 or 1064 nm), the critical cooling rate required to switch the entire film (on the order of 1 °C ns^{-1}) will impose an upper limit[49] on the thickness that can be effectively cycled, generally accepted to be on the order of 100 nm. One possible path to overcome this limitation will be to embed the PCM in a resonant cavity,[50–52] enabled by the low-loss nature of Sb_2Se_3 in the NIR/IR wavelengths, whereby the effective path length of light is scaled by the cavity's finesse. Another approach will be to use a multilayer structure to both improve the thermal dissipation and to enhance the field in the PCM layer,[53] hence increasing its effective thickness beyond the physical one. We believe that future work will follow either or both these approaches to ensure that any physical thickness limitation does not restrict the space of optical devices that will build upon the results of this work.

4. Experimental Section

Sample Fabrication: The sample was fabricated via rf magnetron sputtering of 50 nm of Sb_2Se_3 (from a Sb_2Se_3 stoichiometry target from Plasmaterials) on a commercial 70 nm ITO thin film on a 170 micron glass coverslip (SPI Supplies). Without breaking vacuum, another 100 nm of ITO was deposited as a cladding and the sample was subsequently annealed at 100 °C.

Laser Switching Setup: The details of the experimental setup were shown in **Figure 6** above. A 500 mW 532 nm laser (CNI Laser) was polarization filtered then sent through an acousto-optic modulator (AOM,

© 2023 The Authors. Advanced Functional Materials published by Wiley-VCH GmbH

16163028, 2024, 14, Downloaded from https://advanced.onlinelibrary.wiley.com/doi/10.1002/adfm.202310306 by Chetanat Padungathikij - Cochrane Thailand , Wiley Online Library on [18/03/2026]. See the Terms and Conditions (https://onlinelibrary.wiley.com/terms-and-conditions) on Wiley Online Library for rules of use; OA articles are governed by the applicable Creative Commons License

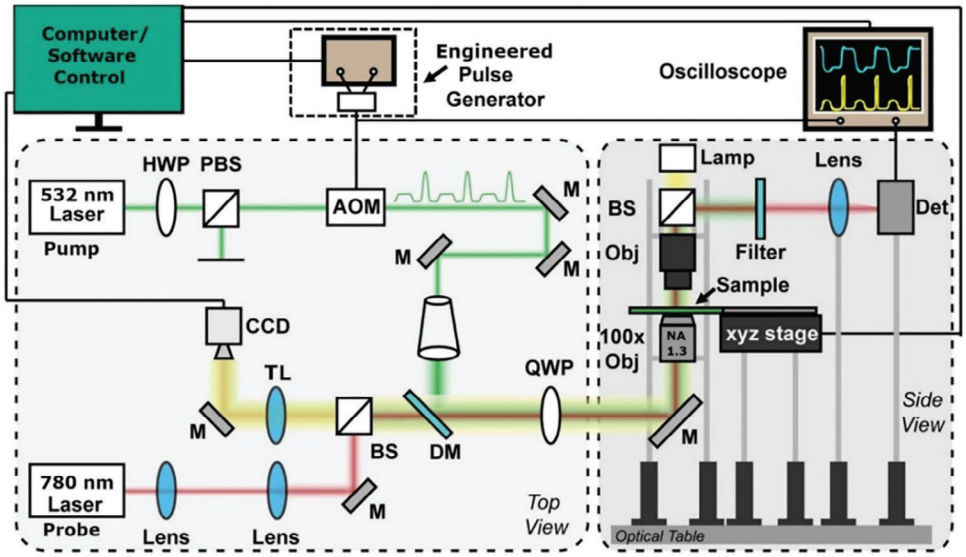

Figure 6. Experimental setup for optical switching and characterization of Sb_2Se_3 PCM film.

Intraaction Corp). The AOM was controlled via a home-built pulse delay generator with controllable pulse widths and decay time to produce pulses ranging from 200 ns to 10 µs and controllable power from 0 to 400 mW and the 532 nm laser was expanded to fill the 100x oil immersion objective ($NA = 1.3$) below the sample. A 633 nm He–Ne laser is co-aligned with the 532 nm switching laser and the two lasers were filtered and polarization controlled via an achromatic quarter wave plate. The 100x objective focused the switching and alignment/readout beams. The sample was mounted on a closed-loop piezoelectric nanopositioner (Piezosystem Tritor) sitting on a tip-tilt micrometer stage. White light from a tungsten-halogen lamp was collimated and sent via a beam splitter to a co-focusing objective to illuminate the area under excitation. The readout beam was collected by the illumination objective and sent to a high-speed amplified avalanche photodetector (Thorlabs APD430A). An imaging tube lens was placed at ≈20 cm from the 100x objective to collect the image of the sample on a CMOS camera.

Supporting Information

Supporting Information is available from the Wiley Online Library or from the author.

Acknowledgements

J.R.H. acknowledges support from the Air Force Office of Scientific Research (Program Manager Dr. Gernot Pomrenke) under award number FA9550-20RYCOR059. M.S.A., I.A., Z.B., and T.P. acknowledge support from the Small Business Innovation Research Program under award FA8650-18-P1700.

Conflict of Interest

The authors declare no conflict of interest.

Data Availability Statement

The data that support the findings of this study are available from the corresponding author upon reasonable request.

Keywords

integrated photonics circuits, phase change materials, reconfigurable and tunable photonics

Received: August 28, 2023
Revised: December 12, 2023
Published online: December 22, 2023

[1] W. Zhang, J. Yao, *Nat. Commun.* **2020**, *111*, 1.
[2] J. Capmany, I. Gasulla, D. Pérez, *Nat. Photonics* **2015**, *10*, 6.
[3] B. Gholipour, J. Zhang, K. F. Macdonald, D. W. Hewak, N. I. Zheludev, *Adv. Mater.* **2013**, *25*, 3050.
[4] R. Chen, Z. Fang, F. Miller, H. Rarick, J. E. Fröch, A. Majumdar, *ACS Photonics* **2022**, *9*, 3181.
[5] G. T. Reed, G. Mashanovich, F. Y. Gardes, D. J. Thomson, *Nat. Photonics* **2010**, *48*, 518.
[6] P. P. Iyer, M. Pendharkar, C. J. Palmstrøm, J. A. Schuller, *Nat. Commun.* **2017**, *8*, 472.
[7] Y. Horie, A. Arbabi, E. Arbabi, S. M. Kamali, A. Faraon, *ACS Photonics* **2018**, *5*, 1711.
[8] J. Zhang, Y. Kosugi, A. Otomo, Y.-L. Ho, J.-J. Delaunay, Y. Nakano, T. Tanemura, *Appl. Phys. Lett.* **2018**, *113*, 231102.
[9] Y. Shi, Y. Yin, D. Dai, L. Yu, S. He, *J Ocul Pharmacol Ther* **2016**, *3*, 159.
[10] Z. Yong, W. D. Sacher, Y. Huang, J. C. Mikkelsen, Y. Yang, X. Luo, P. Dumais, D. Goodwill, H. Bahrami, P. G.-Q. Lo, E. Bernier, J. K. S. Poon, *Opt. Express* **2017**, *25*, 8425.
[11] T. Cao, R. Wang, R. E. Simpson, G. Li, *Prog. Quantum Electron.* **2020**, *74*, 100299.
[12] J. Zheng, A. Khanolkar, P. Xu, S. Colburn, S. Deshmukh, J. Myers, J. Frantz, E. Pop, J. Hendrickson, J. Doylend, N. Boechler, A. Majumdar, *Opt. Mater. Express* **2018**, *8*, 1551.
[13] X. Yin, M. Schäferling, A.-K. U. Michel, A. Tittl, M. Wuttig, T. Taubner, H. Giessen, *Nano Lett.* **2015**, *15*, 4255.
[14] J. A. Burrow, M. S. Alam, E. M. Smith, R. Yahiaoui, R. Laing, P. J. Shah, T. A. Searles, S. Vangala, J. R. Hendrickson, A. Sarangan, I. Agha, **2021**, https://doi.org/10.48550/arXiv.2111.09940.

© 2023 The Authors. Advanced Functional Materials published by Wiley-VCH GmbH

16163028, 2024, 14, Downloaded from https://advanced.onlinelibrary.wiley.com/doi/10.1002/adfm.202310306 by Chetanat Padungathaldj - Cochrane Thailand , Wiley Online Library on [18/03/2026]. See the Terms and Conditions (https://onlinelibrary.wiley.com/terms-and-conditions) on Wiley Online Library for rules of use; OA articles are governed by the applicable Creative Commons License

[15] C. Rios, P. Hosseini, C. D. Wright, H. Bhaskaran, W. H. P. Pernice, *Adv. Mater.* **2014**, *26*, 1372.
[16] J. Zheng, Z. Fang, C. Wu, S. Zhu, P. Xu, J. K. Doylend, S. Deshmukh, E. Pop, S. Dunham, M. Li, A. Majumdar, *Adv. Mater.* **2020**, *32*, 2001218.
[17] J. Feldmann, N. Youngblood, C. D. Wright, H. Bhaskaran, W. H. P. Pernice, *Nat* **2019**, *569*, 208.
[18] B.-S. Lee, J. R. Abelson, S. G. Bishop, D.-H. Kang, B.-K. Cheong, K.-B. Kim, *J. Appl. Phys.* **2005**, *97*, 093509.
[19] I. Chakraborty, G. Saha, K. Roy, *Phys. Rev. Appl.* **2019**, *11*, 014063.
[20] Y. Zhang, J. B. Chou, J. Li, H. Li, Q. Du, A. Yadav, S. Zhou, M. Y. Shalaginov, Z. Fang, H. Zhong, C. Roberts, P. Robinson, B. Bohlin, C. Ríos, H. Lin, M. Kang, T. Gu, J. Warner, V. Liberman, K. Richardson, J. Hu, *Nat. Commun.* **2019**, *10*, 1.
[21] K. V. Sreekanth, R. Medwal, C. M. Das, M. Gupta, M. Mishra, K.-T. Yong, R. S. Rawat, R. Singh, *Nano Lett.* **2021**, *21*, 4044.
[22] D. Lencer, M. Salinga, B. Grabowski, T. Hickel, J. Neugebauer, M. Wuttig, *Nat. Mater.* **2008**, *712*, 972.
[23] K.-M. Chung, D. Wamwangi, M. Woda, M. Wuttig, W. Bensch, *J. Appl. Phys.* **2008**, *103*, 083523.
[24] Y.-T. Liu, X.-B. Li, H. Zheng, N.-K. Chen, X.-P. Wang, X.-L. Zhang, H.-B. Sun, S. Zhang, *Adv. Funct. Mater.* **2021**, *31*, 2009803.
[25] M. Delaney, I. Zeimpekis, D. Lawson, D. W. Hewak, O. L. Muskens, *Adv. Funct. Mater.* **2020**, *30*, 2002447.
[26] K. Gao, K. Du, S. Tian, H. Wang, L. Zhang, Y. Guo, B. Luo, W. Zhang, T. Mei, *Adv. Funct. Mater.* **2021**, *31*, 2103327.
[27] X. Chen, Y. Xue, Y. Sun, J. Shen, S. Song, M. Zhu, Z. Song, Z. Cheng, P. Zhou, *Adv. Mater.* **2022**, *35*, 2203909.
[28] M. Delaney, I. Zeimpekis, H. Du, X. Yan, M. Banakar, D. J. Thomson, D. W. Hewak, O. L. Muskens, *Sci. Adv.* **2021**, *7*, 3500.
[29] S. Huang, P. Chang, P. S. Davids, J. Luo, A. K. Y. Jen, B. A. Block, M. R. Reshotko, B. M. Polishak, T. R. Younkin, *Opt. Express* **2008**, *16*, 18326.
[30] C. Wang, M. Zhang, X. Chen, M. Bertrand, A. Shams-Ansari, S. Chandrasekhar, P. Winzer, M. Lončar, *Nature.* **2018**, *562*, 101.
[31] J. T. Robinson, R. Soref, W. Gao, C. Qiu, Q. Xu, *Opt. Lett.* **2014**, *39*, 6767.
[32] J. Feldmann, M. Stegmaier, N. Gruhler, C. Ríos, H. Bhaskaran, C. D. Wright, W. H. P. Pernice, *Nat. Comm.* **2017**, *8*, 1256.
[33] F. Rao, K. Ding, Y. Zhou, Y. Zheng, M. Xia, S. Lv, Z. Song, S. Feng, I. Ronneberger, R. Mazzarello, W. Zhang, E. Ma, *Science* **2017**, *358*, 1423.
[34] S. Kim, G. W. Burr, W. Kim, S.-W. Nam, *MRS Bull.* **2019**, *44*, 710.
[35] L. Martin-Monier, C. C. Popescu, L. Ranno, B. Mills, S. Geiger, D. Callahan, M. Moebius, J. Hu, *Opt. Mater. Express* **2022**, *12*, 2145.
[36] D. Lawson, D. W. Hewak, O. L. Muskens, I. Zeimpekis, *J Opt* **2022**, *24*, 064013.
[37] T. D. Janicki, Z. Wan, R. Liu, P. G. Evans, J. R. Schmidt, *J. Chem. Phys.* **2022**, *157*, 100901.
[38] J. Jang, D. Yang, D. Moon, D. Choi, H. J. Lim, S.-G. Kang, D. Bae, H. N. Han, Y. Park, E. Yoon, *J. Cryst. Growth* **2018**, *498*, 130.
[39] C. W. White, L. A. Boatner, P. S. Sklad, C. J. McHargue, J. Rankin, G. C. Farlow, M. J. Aziz, *Nucl. Instruments Methods Phys. Res. Sect. B Beam Interact. with Mater. Atoms* **1988**, *32*, 11.
[40] Y. Chen, M. H. Yusuf, Y. Guan, R. Jacobson, M. G. Lagally, S. E. Babcock, T. F. Kuech, P. G. Evans, *ACS Appl. Mater. Interfaces* **2017**, *9*, 41034.
[41] T. Ashida, A. Miyamura, N. Oka, Y. F. Sato, T. Yagi, N. Taketoshi, T. Baba, Y. Shigesato, *J. Appl. Phys.* **2009**, *105*, 073709.
[42] D. Thuau, I. Koymen, R. Cheung, *Microelectron. Eng.* **2011**, *88*, 2408.
[43] W. Dong, H. Liu, J. K. Behera, L. Lu, R. J. H. Ng, K. V. Sreekanth, X. Zhou, J. K. W. Yang, R. E. Simpson, *Adv. Funct. Mater.* **2018**, *29*, 1806181.
[44] A. Debunne, K. Virwani, A. Padilla, G. W. Burr, A. J. Kellock, V. R. Deline, R. M. Shelby, B. Jackson, *J. Electrochem. Soc.* **2011**, *158*, H965.
[45] S. Alam, C. Zhao, in *Conf. Lasers Electro-Optics*, The Optical Society, San Jose, **2010**.
[46] L. Goux, D. Tio Castro, G. A. M. Hurkx, J. G. Lisoni, R. Delhougne, D. J. Gravesteijn, K. Attenborough, D. J. Wouters, *IEEE Trans. Electron Devices* **2009**, *56*, 354.
[47] Q. Wang, E. T. F. Rogers, B. Gholipour, C.-M. Wang, G. Yuan, J. Teng, N. I. Zheludev, *Nat. Photonics* **2015**, *10*, 60.
[48] C. L. Panuski, I. Christen, M. Minkov, C. J. Brabec, S. Trajtenberg-Mills, A. D. Griffiths, J. J. D. Mckendry, G. L. Leake, D. J. Coleman, C. Tran, J. St Louis, J. Mucci, C. Horvath, J. N. Westwood-Bachman, S. F. Preble, M. D. Dawson, M. J. Strain, M. L. Fanto, D. R. Englund, *Nat. Photonics* **2022**, *16*, 834.
[49] Y. Zhang, C. Ríos, M. Y. Shalaginov, M. Li, A. Majumdar, T. Gu, J. Hu, *Appl. Phys. Lett.* **2021**, *118*, 210501.
[50] C. Peng, R. Hamerly, M. Soltani, D. R. Englund, *Opt Express* **2019**, *27*, 30669.
[51] P. Hosseini, C. D. Wright, H. Bhaskaran, *Nature* **2014**, *511*, 206.
[52] Y. Huang, C. Lee, M. Rath, V. Ferrari, H. Yu, T. J. Woehl, J. H. Ni, I. Takeuchi, C. Ríos, *Mat. Tod. Adv.* **2023**, *18*, 100364.
[53] R. Heenkenda, K. Hirakawa, A. Sarangan, *Opt. Express* **2021**, *29*, 33795.

© 2023 The Authors. Advanced Functional Materials published by Wiley-VCH GmbH

16163028, 2024, 14, Downloaded from https://advanced.onlinelibrary.wiley.com/doi/10.1002/adfm.202310306 by Chetanat Padungathaki - Cochrane Thailand , Wiley Online Library on [18/03/2026]. See the Terms and Conditions (https://onlinelibrary.wiley.com/terms-and-conditions) on Wiley Online Library for rules of use; OA articles are governed by the applicable Creative Commons License